Work Order ID 70834

Wednesday, June 15, 2011 4:00:03 PM

Item ID: D2330-041 **Accept** **Setup Start** **Stop**

Revision ID:

Item Name: Basket Base Assembly

Start Date: 6/21/2011 **Start Qty:** 1.00 **Cust Item ID:**

Required Date: 6/29/2011 **Req'd Qty:** 1.00 **Customer:**

Reference:

Approvals: **Process Plan:** CMF **Date:** 11-06-15 **Tooling:** **Date:** **Run Start** **Stop**

QC: **Date:** **SPC (Y/N):** **Date:**

Sequence ID/ Work Center ID	Operation Description	Set Up/ Run Hours	Tool ID	Tool #	Plan Code	Accept Qty	Reject Qty	Reject Number	Insp. Stamp
Draw Nbr / **Revision Nbr**									
D2330 / Rev H									
100		0.00							
Large Fab	**Memo**	0.00							
Large Fab	1- weld as per dwg D2330 and QSI 004 S.S Rod batch: M115778								
110	QC9- Inspect visual per QSI004- Fusion Welds	0.00							
QC	**Memo**	0.00							
Quality Control									
120	QC5- Inspect part completeness to step on W/O	0.00							
QC	**Memo**	0.00							
Quality Control									

11.06.22.

11.06.23

5 11/06/23

Dart Aerospace Ltd

W/O:		WORK ORDER CHANGES					
DATE	STEP	PROCEDURE CHANGE	By	Date	Qty	Approval Chief Eng / Prod Mgr	Approval QC Inspector

Part No: _____ **PAR #:** _____ **Fault Category:** _____ **NCR:** Yes No **DQA:** _____ **Date:** _____

Resolution: _____ **Disposition:** _____ **QA: N/C Closed:** _____ **Date:** _____

NCR:		WORK ORDER NON-CONFORMANCE (NCR)						
DATE	STEP	Description of NC Section A	Corrective Action Section B			Verification Section C	Approval Chief Eng	Approval QC Inspector
			Initial Chief Eng	Action Description Chief Eng	Sign & Date			

NOTE: Date & initial all entries

H:\fFORMS\Quality Assurance\approved QA\NCRWO RevE

Work Order ID 70834

Wednesday, June 15, 2011 4:00:03 PM

Item ID: D2330-041 **Accept** **Setup Start**

Revision ID: **Stop**

Item Name: Basket Base Assembly

Start Date: 6/21/2011 **Start Qty:** 1.00 **Cust Item ID:**

Required Date: 6/29/2011 **Req'd Qty:** 1.00 **Customer:**

Reference:

Approvals: **Process Plan:** _____ **Date:** _____ **Tooling:** _____ **Date:** _____ **Run Start**

QC: _____ **Date:** _____ **SPC (Y/N):** _____ **Date:** _____ **Stop**

Sequence ID/ Work Center ID	Operation Description	Set Up/ Run Hours	Tool ID	Tool #	Plan Code	Accept Qty	Reject Qty	Reject Number	Insp. Stamp
125	Pressure Wash per QSI005 4.3	0.00							
HandFinish	Memo	0.00							
Hand Finishing									
130	White Gloss(Ref:4.3.5.2) per QSI005 4.3-Steel	0.00							
Powdercoat	Memo	0.00							
Powder Coating	Start Time: 11:30 Oven Temperature: 400 °F Finish Time: 12:00								
140	QC3- Inspect Part Finish	0.00							
QC	Memo	0.00							
Quality Control									

1st Coat Start: 12:00 Temp: 400 °F Finish: 12:30

2nd Coat

1X Ø M.L 11/06/23

1X Ø M.L 11/06/23

1X Ø M.L 11/06/23

1 Ø M.L 11/06/23

M116964

Dart Aerospace Ltd

W/O:		WORK ORDER CHANGES					
DATE	STEP	PROCEDURE CHANGE	By	Date	Qty	Approval Chief Eng / Prod Mgr	Approval QC Inspector

Part No: _____ **PAR #:** _____ **Fault Category:** _____ **NCR:** Yes No **DQA:** _____ **Date:** _____

Resolution: _____ **Disposition:** _____ **QA: N/C Closed:** _____ **Date:** _____

NCR:		WORK ORDER NON-CONFORMANCE (NCR)						
DATE	STEP	Description of NC Section A	Corrective Action Section B			Verification Section C	Approval Chief Eng	Approval QC Inspector
			Initial Chief Eng	Action Description Chief Eng	Sign & Date			

NOTE: Date & initial all entries

H:\fFORMS\Quality Assurance\approved QA\NCRWO RevE

Work Order ID 70834

Wednesday, June 15, 2011 4:00:03 PM

Item ID: D2330-041 **Accept** **Setup Start**

Revision ID: **Stop**

Item Name: Basket Base Assembly

Start Date: 6/21/2011 **Start Qty:** 1.00 **Cust Item ID:**

Required Date: 6/29/2011 **Req'd Qty:** 1.00 **Customer:**

Reference:

Approvals: **Process Plan:** _____ **Date:** _____ **Tooling:** _____ **Date:** _____ **Run Start**

QC: _____ **Date:** _____ **SPC (Y/N):** _____ **Date:** _____ **Stop**

Sequence ID/ Work Center ID	Operation Description	Set Up/ Run Hours	Tool ID	Tool #	Plan Code	Accept Qty	Reject Qty	Reject Number	Insp. Stamp
150	Identify as per dwg & Stock Location: 6-A	0.00							
Packaging	Memo w/o 70832	0.00							
Packaging									
160	QC21- Final Inspection - Work Order Release	0.00							
QC	Memo	0.00							
Quality Control									

11/06/23 ①

11/6/23

MF
11-06-23

Dart Aerospace Ltd

W/O:		WORK ORDER CHANGES					
DATE	STEP	PROCEDURE CHANGE	By	Date	Qty	Approval Chief Eng / Prod Mgr	Approval QC Inspector

Part No: _____ **PAR #:** _____ **Fault Category:** _____ **NCR:** Yes No **DQA:** _____ **Date:** _____

Resolution: _____ **Disposition:** _____ **QA: N/C Closed:** _____ **Date:** _____

NCR:		WORK ORDER NON-CONFORMANCE (NCR)						
DATE	STEP	Description of NC Section A	Corrective Action Section B			Verification Section C	Approval Chief Eng	Approval QC Inspector
			Initial Chief Eng	Action Description Chief Eng	Sign & Date			

NOTE: Date & initial all entries

H:\fFORMS\Quality Assurance\approved QA\NCRWO RevE

Picklist Print

Wednesday, June 15, 2011 3:59:54 PM

4

Work Order ID: 70834

Parent Item: D2330-041

Parent Item Name: Basket Base Assembly

Start Date: 6/21/2011 **Required Date:** 6/29/2011

Start Qty: 1.00 **Required Qty:** 1.00

Comments: IPP Rev:H□02.09.04□M304EX0.75-16F was M750-16FXS-S/S□KJ
IPP Rev:I 08-09-09 revF as per dwg (ecn 08-522) DD verF by:EC
IPP REV:J 10.11.30 AS PER DWG REV.H DD VERF:EC

Component Item ID/ Item Name	Replacement Item ID	Mfg/ Purch	Bin Item	Primary Location	Last Location	Route Seq ID	Unit of Measure	Qty on Hand	Qty per Kit	Total Qty	Qty Issued	Date Issued	Status
D2012-107		Manufactured	No			100	Each	21.0000	1	1			
Clevis										SAD	11-06-20		
				Location			**Loc Qty**		**Loc Code**				
				WA005			21						
					66811		21			1			
D2235-1		Manufactured	No			100	Each	14.0000	4	4			
Basket Rib										SAD	11-06-20		
				Location			**Loc Qty**		**Loc Code**				
				WA			10						
					69651		10			4			
				WA005			4						
					66895		4						
D2252-1		Manufactured	No			100	Each	16.0000	2	2			
Frame										SAD	11-06-20		
				Location			**Loc Qty**		**Loc Code**				
				WA006			16						
					51941		8			2			
					58084		8						

Dart Aerospace Ltd

W/O:		WORK ORDER CHANGES					
DATE	STEP	PROCEDURE CHANGE	By	Date	Qty	Approval Chief Eng / Prod Mgr	Approval QC Inspector

Part No: _____ **PAR #:** _____ **Fault Category:** _____ **NCR:** Yes No **DQA:** _____ **Date:** _____

Resolution: _____ **Disposition:** _____ **QA: N/C Closed:** _____ **Date:** _____

NCR:		WORK ORDER NON-CONFORMANCE (NCR)						
DATE	STEP	Description of NC Section A	Corrective Action Section B			Verification Section C	Approval Chief Eng	Approval QC Inspector
			Initial Chief Eng	Action Description Chief Eng	Sign & Date			

NOTE: Date & initial all entries

Picklist Print

Wednesday, June 15, 2011 3:59:54 PM

Work Order ID: 70834

Parent Item: D2330-041

Parent Item Name: Basket Base Assembly

Start Date: 6/21/2011 **Required Date:** 6/29/2011

Start Qty: 1.00 **Required Qty:** 1.00

D2252-7	Manufactured	No	100	Each	5.0000	1	1	SAD 11-06-20
Frame								

Location	Loc Qty	Loc Code
WA006	5	
48324	1	
61960	4	(1)

D2253-1	Manufactured	No	100	Each	19.0000	2	2	SAD 11-06-20
Lug								

Location	Loc Qty	Loc Code
WA005	19	
53965	19	(2)

D2254	Manufactured	No	100	Each	50.0000	2	2	SAD 11-06-20
Gussett								

Location	Loc Qty	Loc Code
WA005	50	
39801	50	(2)

D2327-3	Manufactured	No	100	Each	10.0000	1	1	SAD 11-06-20
Spacer Bushing								

Location	Loc Qty	Loc Code
WA005	10	
70724	10	(1)

D2330-1	Manufactured	No	100	Each	4.0000	2	2	SAD 11-06-20
Frame								

Location	Loc Qty	Loc Code
WA006	4	
61931	4	(2)

Dart Aerospace Ltd

W/O:		WORK ORDER CHANGES					
DATE	STEP	PROCEDURE CHANGE	By	Date	Qty	Approval Chief Eng / Prod Mgr	Approval QC Inspector

Part No: _____ **PAR #:** _____ **Fault Category:** _____ **NCR:** Yes No **DQA:** _____ **Date:** _____

Resolution: _____ **Disposition:** _____ **QA: N/C Closed:** _____ **Date:** _____

NCR:		WORK ORDER NON-CONFORMANCE (NCR)						
DATE	STEP	Description of NC Section A	Corrective Action Section B			Verification Section C	Approval Chief Eng	Approval QC Inspector
			Initial Chief Eng	Action Description Chief Eng	Sign & Date			

NOTE: Date & initial all entries

H:\fFORMS\Quality Assurance\approved QA\NCRWO RevE

Picklist Print

Wednesday, June 15, 2011 3:59:54 PM

Work Order ID: 70834

Parent Item: D2330-041

Parent Item Name: Basket Base Assembly

Start Date: 6/21/2011 **Required Date:** 6/29/2011

Start Qty: 1.00 **Required Qty:** 1.00

D2330-5 Frame	Manufactured	No	100	Each	1.0000	1	1	SAD 11-06-20

Location	Loc Qty	Loc Code
WA006	1	
61876	1	1

D2330-7 Frame	Manufactured	No	100	Each	1.0000	1	1	SAD 11-06-20

Location	Loc Qty	Loc Code
WA006	1	
61877	1	1

D2581 Mounting Bracket	Manufactured	No	100	Each	74.0000	4	4	SAD 11-06-20

Location	Loc Qty	Loc Code
WA	74	
68964	6	
69258	28	
69739	40	4

D3748-1 Hinge Half	Manufactured	No	100	Each	11.0000	3	3	SAD 11-06-20

Location	Loc Qty	Loc Code
WA	11	
68884	11	3

Dart Aerospace Ltd

W/O:		WORK ORDER CHANGES					
DATE	STEP	PROCEDURE CHANGE	By	Date	Qty	Approval Chief Eng / Prod Mgr	Approval QC Inspector

Part No: _____ **PAR #:** _____ **Fault Category:** _____ **NCR:** Yes No **DQA:** _____ **Date:** _____

Resolution: _____ **Disposition:** _____ **QA: N/C Closed:** _____ **Date:** _____

NCR:		WORK ORDER NON-CONFORMANCE (NCR)						
DATE	STEP	Description of NC Section A	Corrective Action Section B			Verification Section C	Approval Chief Eng	Approval QC Inspector
			Initial Chief Eng	Action Description Chief Eng	Sign & Date			

NOTE: Date & initial all entries

H:\fFORMS\Quality Assurance\approved QA\NCRWO RevE

Picklist Print

Wednesday, June 15, 2011 3:59:56 PM

Work Order ID: 70834

Parent Item: D2330-041

Parent Item Name: Basket Base Assembly

Start Date: 6/21/2011 **Required Date:** 6/29/2011

Start Qty: 1.00 **Required Qty:** 1.00

M304EX0.75-16F	Purchased	No	100	sf	611.1169	30	30

Expanded Metal Flat SS

11.06.22

Location		Loc Qty	Loc Code
MAT		38.2107	
	117708	38.2107	
WA		572.9062	
	115012	102	
	117197	134.8721	
	117455	16.0341	
	117896	320	

117896

30

Dart Aerospace Ltd

W/O:		WORK ORDER CHANGES					
DATE	STEP	PROCEDURE CHANGE	By	Date	Qty	Approval Chief Eng / Prod Mgr	Approval QC Inspector

Part No: _____ **PAR #:** _____ **Fault Category:** _____ **NCR:** Yes No **DQA:** _____ **Date:** _____

Resolution: _____ **Disposition:** _____ **QA: N/C Closed:** _____ **Date:** _____

NCR:		WORK ORDER NON-CONFORMANCE (NCR)						
DATE	STEP	Description of NC Section A	Corrective Action Section B			Verification Section C	Approval Chief Eng	Approval QC Inspector
			Initial Chief Eng	Action Description Chief Eng	Sign & Date			

NOTE: Date & initial all entries

ITEM	QTY -041	QTY -043	PART NUMBER	DESCRIPTION
1	X		D2330-041	BASKET ASSEMBLY
3		X	D2330-043	LID ASSEMBLY
7	1		D2012-107	CLEVIS
8	4		D2235-1	RIB
9	2	2	D2252-1	FRAME
10	1	4	D2252-7	FRAME
11	2		D2253-1	LUG
12	2		D2254	GUSSET
13	1	1	D2327-3	BUSHING
14		1	D2329	LABEL PLATE
15	2	2	D2330-1	FRAME
16	1		D2330-5	FRAME
17	1		D2330-7	FRAME
18		1	D2330-15	FRAME
19	4	2	D2581	MOUNTING CHANNEL
20	3		D3748-1	HINGE HALF
21		3	D3749-1	HINGE HALF

#70834

RELEASED 2010-11-25

NOTES:

1) FRAME MATERIAL: AISI 304/316 SS, 3/4 x 3/4 x 0.065 WALL SQUARE TUBING
REF. DART SPEC M304TS0.750W.065
2) MESH MATERIAL: 3/4-16F EXPANDED SS
REF DART SPEC M304EX0.75-16F
3) FINISH: POWDER COAT ASSEMBLY GLOSS WHITE (4.3.5.2) PER DART QSI 005 4.3
4) TOLERANCES: PER DART QSI 018 UNLESS OTHERWISE NOTED
5) UNITS: INCHES UNLESS OTHERWISE NOTED
6) BREAK SHARP EDGES: N/A
7) IDENTIFICATION: N/A
8) WEIGHT: N/A
9) WELDING: PER DART QSI 004

REV.	DESCRIPTION	BY	DATE
H	DIM 0.50 WAS 0.75 (ZN D2-3 & D6-3) REF NCR 10-346	JPH	10.09.28
G	ADDED 'ITEM' COLUMN TO PARTS LIST; ADDED NOTE 10 ON SHT 2; ITEMS 20 AND 21 REPLACE D2232-1/-3; STRETCHED LID FROM 83.27" TO 84.00": ITEMS 9 &10 REPLACE D2330-3/-9/-13; ITEM 13 (ON LID) REPLACES D2327-1; REORGANIZED ALL SECTION & DETAIL VIEWS. REASON: SEE PAR#09-006.	MB	09.02.05
F	DRAWING UPDATED TO CURRENT STANDARDS. SHEET 6 ADDED. FRAME MATERIAL THICKNESS WAS 0.060.	AJS	08.08.11
E	INCORPORATED D1. D2253-1 WAS D2253 (NCR 533).	KE	05.11.10
D	MODIFIED LATCH, REDRAWN	KE	99.09.14
C	ADDED LATCH AND LABEL PLATE	BK	96.05.23

DESIGN	JB	**DART AEROSPACE LTD** HAWKESBURY, ONTARIO, CANADA	
DRAWN			
CHECKED		DRAWING NO.	REV. H
MFG. APPR.		D2330	SHEET 1 OF 6
APPROVED		TITLE	SCALE
DE APPR.		BASKET ASSEMBLY (206B)	NTS
DATE	10.09.28		

Dart Aerospace Ltd

W/O:		WORK ORDER CHANGES					
DATE	STEP	PROCEDURE CHANGE	By	Date	Qty	Approval Chief Eng / Prod Mgr	Approval QC Inspector

Part No: _____ **PAR #:** _____ **Fault Category:** _____ **NCR:** Yes No **DQA:** _____ **Date:** _____

Resolution: _____ **Disposition:** _____ **QA: N/C Closed:** _____ **Date:** _____

NCR:		WORK ORDER NON-CONFORMANCE (NCR)						
DATE	STEP	Description of NC Section A	Corrective Action Section B			Verification Section C	Approval Chief Eng	Approval QC Inspector
			Initial Chief Eng	Action Description Chief Eng	Sign & Date			

NOTE: Date & initial all entries

H:\fFORMS\Quality Assurance\approved QA\NCRWO RevE

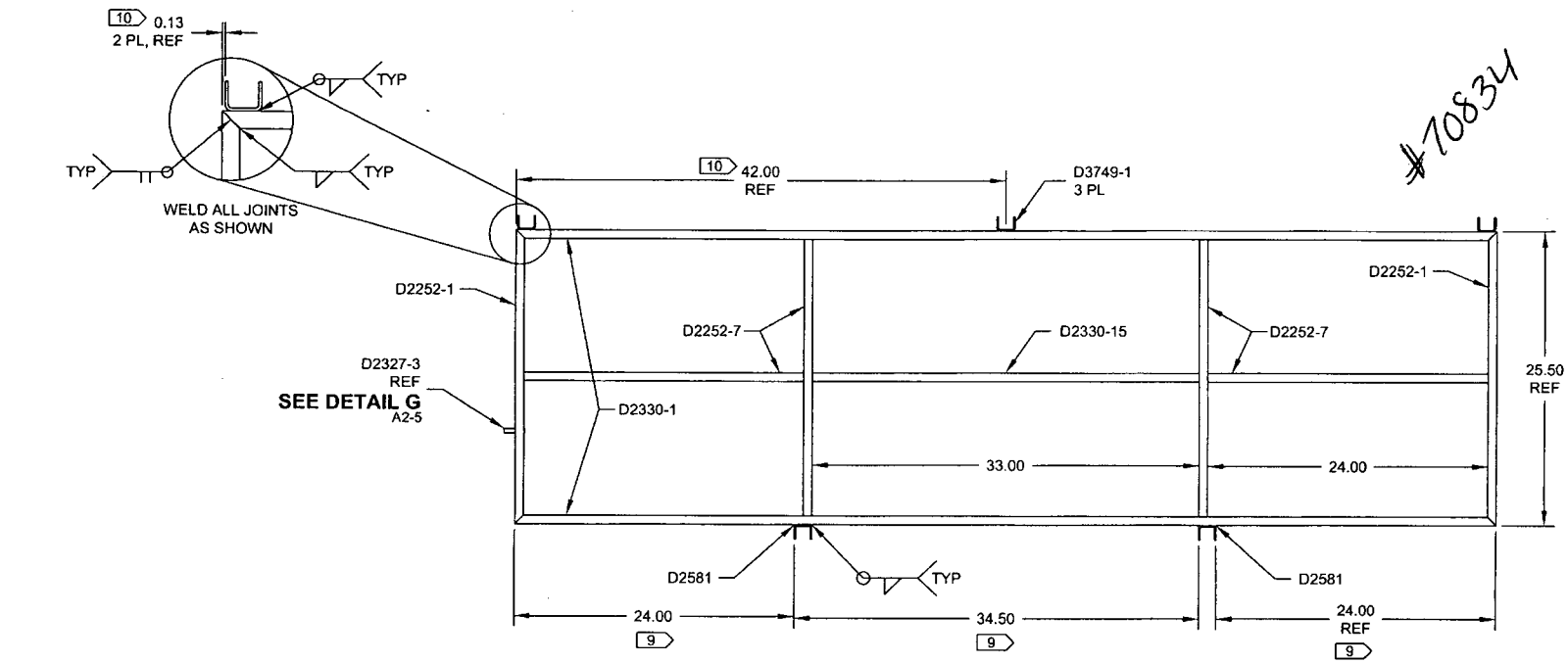

#70834

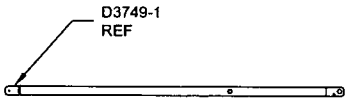

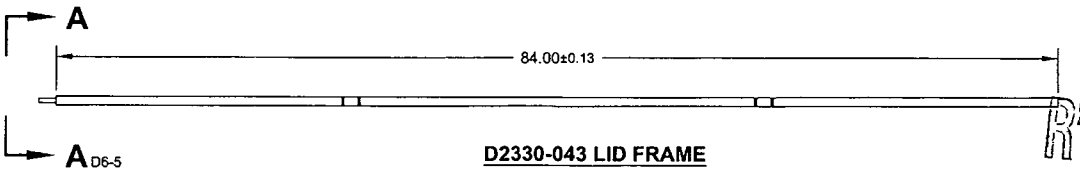

D2330-043 LID FRAME

RELEASED
2010 -11- 25

LID FRAME NOTES:

1) MATERIAL: N/A
2) FINISH: NONE
3) TOLERANCES: PER DART QSI 018 UNLESS OTHERWISE NOTED
4) UNITS: INCHES UNLESS OTHERWISE NOTED
5) BREAK SHARP EDGES: 0.005 TO 0.010 MAX
6) IDENTIFICATION: N/A
7) WEIGHT: N/A
8) WELDING: PER DART QSI 004
9) ALIGN WITH ADJACENT D2581 ON BASE
10) CENTER D3749-1 HINGE HALF ON D3748-1 HINGE HALF LOCATED ON D2330-041 BASKET BASE ASSEMBLY

DESIGN	JB	**DART AEROSPACE LTD** HAWKESBURY, ONTARIO, CANADA
DRAWN		
CHECKED		DRAWING NO. D2330 — REV. H — SHEET 2 OF 6
MFG. APPR.		
APPROVED		TITLE: BASKET ASSEMBLY (206B) — SCALE: NTS
DE APPR.		
DATE	10.09.28	

Dart Aerospace Ltd

W/O:		WORK ORDER CHANGES					
DATE	STEP	PROCEDURE CHANGE	By	Date	Qty	Approval Chief Eng / Prod Mgr	Approval QC Inspector

Part No: _____ **PAR #:** _____ **Fault Category:** _____ **NCR:** Yes No **DQA:** _____ **Date:** _____

Resolution: _____ **Disposition:** _____ **QA: N/C Closed:** _____ **Date:** _____

NCR:		WORK ORDER NON-CONFORMANCE (NCR)						
DATE	STEP	Description of NC Section A	Corrective Action Section B			Verification Section C	Approval Chief Eng	Approval QC Inspector
			Initial Chief Eng	Action Description Chief Eng	Sign & Date			

NOTE: Date & initial all entries

Dart Aerospace Ltd

W/O:		WORK ORDER CHANGES					
DATE	STEP	PROCEDURE CHANGE	By	Date	Qty	Approval Chief Eng / Prod Mgr	Approval QC Inspector

Part No: _____ PAR #: _____ Fault Category: _____ NCR: Yes No DQA: _____ Date: _____

Resolution: _____ Disposition: _____ QA: N/C Closed: _____ Date: _____

NCR:		WORK ORDER NON-CONFORMANCE (NCR)						
DATE	STEP	Description of NC Section A	Corrective Action Section B			Verification Section C	Approval Chief Eng	Approval QC Inspector
			Initial Chief Eng	Action Description Chief Eng	Sign & Date			

NOTE: Date & initial all entries

H:\fFORMS\Quality Assurance\approved QA\NCRWO RevE

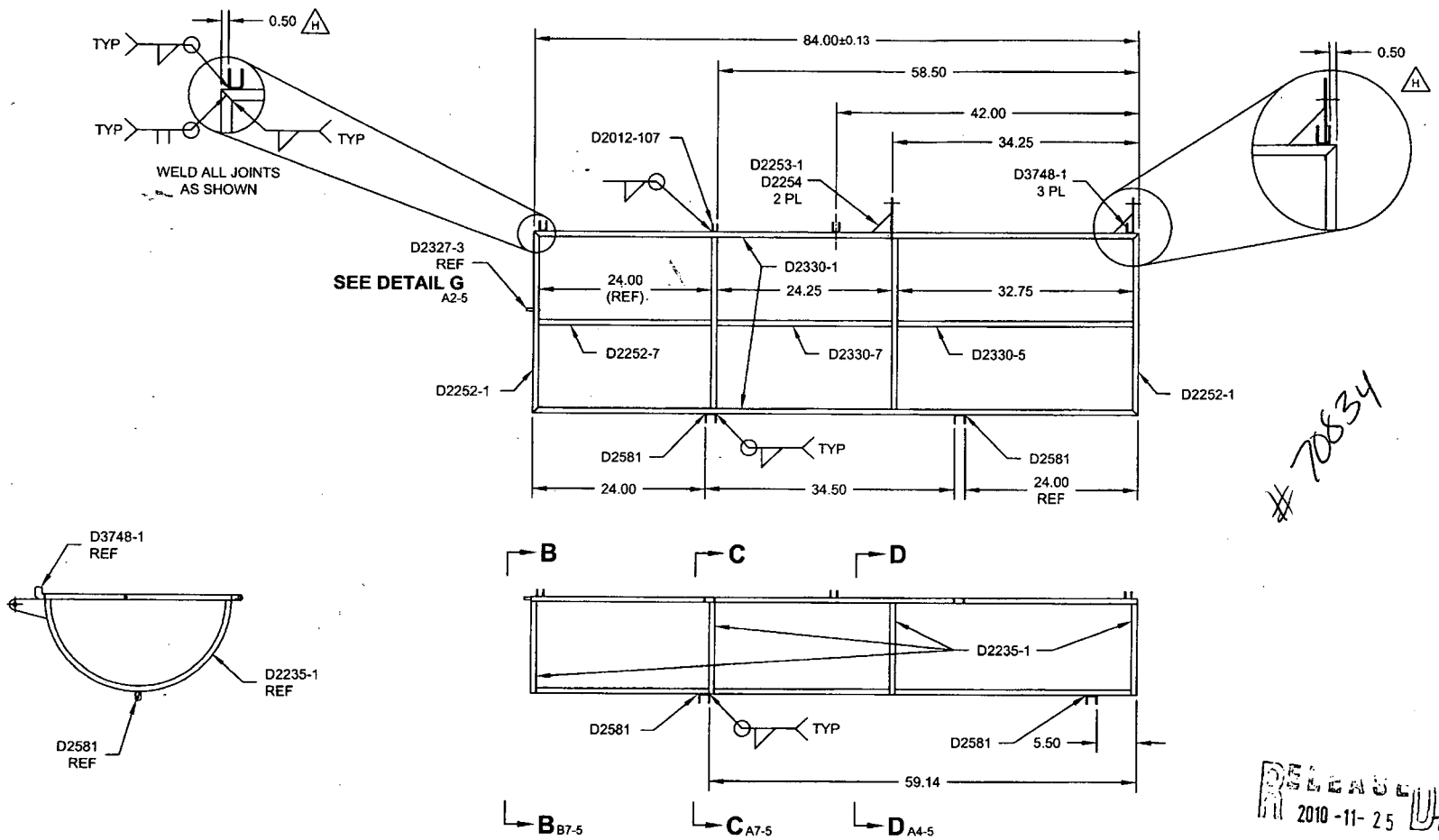

70834

RELEASED
2010-11-25

D2330-041 BASE FRAME ASSEMBLY

BASE FRAME NOTES:

1) MATERIAL: N/A
2) FINISH: NONE
3) TOLERANCES: PER DART QSI 018 UNLESS OTHERWISE NOTED
4) UNITS: INCHES UNLESS OTHERWISE NOTED
5) BREAK SHARP EDGES: 0.005 TO 0.010 MAX
6) IDENTIFICATION: N/A
7) WEIGHT: N/A
8) WELDING: PER DART QSI 004

DESIGN	JB	**DART AEROSPACE LTD** HAWKESBURY, ONTARIO, CANADA
DRAWN	for JPH	
CHECKED		DRAWING NO. REV. H
MFG. APPR.		D2330 SHEET 3 OF 6
APPROVED		TITLE SCALE
DE APPR.		BASKET ASSEMBLY (206B) NTS
DATE	10.09.28	

Dart Aerospace Ltd

W/O:		WORK ORDER CHANGES					
DATE	STEP	PROCEDURE CHANGE	By	Date	Qty	Approval Chief Eng / Prod Mgr	Approval QC Inspector

Part No: _____ **PAR #:** _____ **Fault Category:** _____ **NCR:** Yes No **DQA:** _____ **Date:** _____

Resolution: _____ **Disposition:** _____ **QA: N/C Closed:** _____ **Date:** _____

NCR:		WORK ORDER NON-CONFORMANCE (NCR)						
DATE	STEP	Description of NC Section A	Corrective Action Section B			Verification Section C	Approval Chief Eng	Approval QC Inspector
			Initial Chief Eng	Action Description Chief Eng	Sign & Date			

NOTE: Date & initial all entries

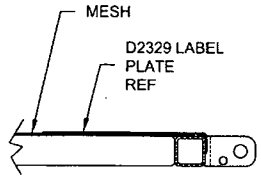

SECTION E-E C3-4
VIEW ROTATED 90° CCW

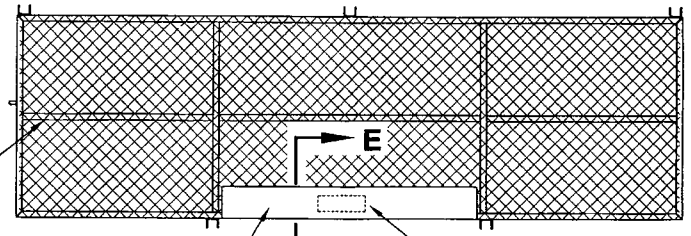

TACK WELD EACH STRAND END OF MESH TO FRAME

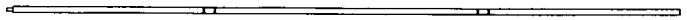

D2330-043 LID ASSEMBLY

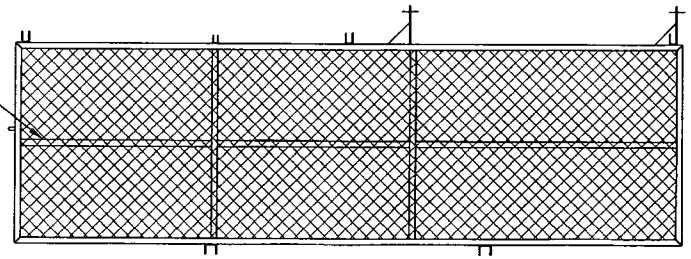

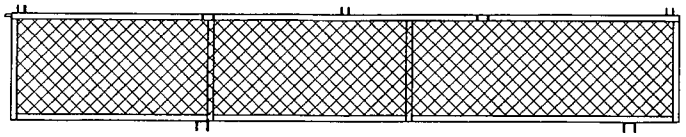

D2330-041 BASE ASSEMBLY

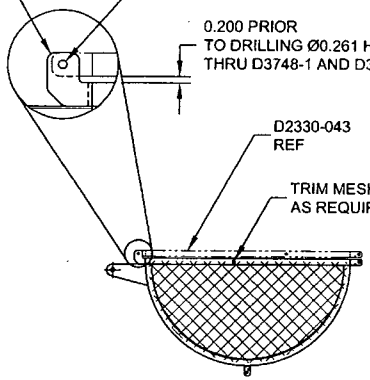

#70834

RELEASED
2010-11-25

ASSEMBLY NOTES:
1) MATERIAL: SEE SHEET 1 FOR MESH MATERIAL
2) FINISH: NONE
3) TOLERANCES: PER DART QSI 018 UNLESS OTHERWISE NOTED
4) UNITS: INCHES UNLESS OTHERWISE NOTED
5) BREAK SHARP EDGES: 0.005 TO 0.010 MAX
6) IDENTIFICATION: N/A
7) WEIGHT: N/A
8) WELDING: PER DART QSI 004

DESIGN	JB	**DART AEROSPACE LTD** HAWKESBURY, ONTARIO, CANADA
DRAWN		DRAWING NO. D2330 — REV. H — SHEET 4 OF 6
CHECKED		
MFG. APPR.		
APPROVED		TITLE: BASKET ASSEMBLY (206B) — SCALE: NTS
DE APPR.		
DATE	10.09.28	

Dart Aerospace Ltd

W/O:		WORK ORDER CHANGES					
DATE	STEP	PROCEDURE CHANGE	By	Date	Qty	Approval Chief Eng / Prod Mgr	Approval QC Inspector

Part No: _____ **PAR #:** _____ **Fault Category:** _____ **NCR:** Yes No **DQA:** _____ **Date:** _____

Resolution: _____ **Disposition:** _____ **QA: N/C Closed:** _____ **Date:** _____

NCR:		WORK ORDER NON-CONFORMANCE (NCR)						
DATE	STEP	Description of NC Section A	Corrective Action Section B			Verification Section C	Approval Chief Eng	Approval QC Inspector
			Initial Chief Eng	Action Description Chief Eng	Sign & Date			

NOTE: Date & initial all entries

H:\FORMS\Quality Assurance\approved QA\NCRWO RevE

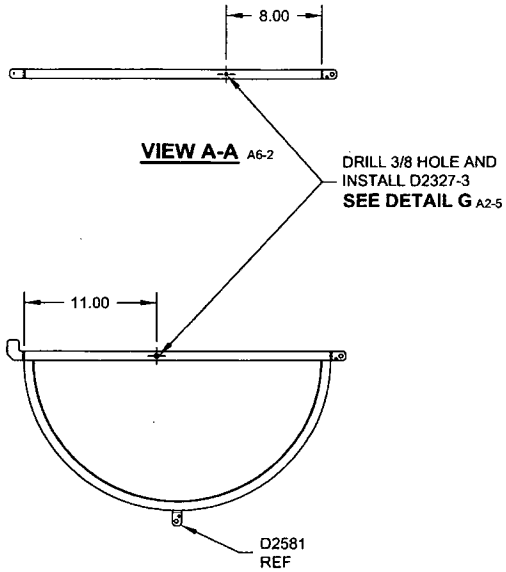

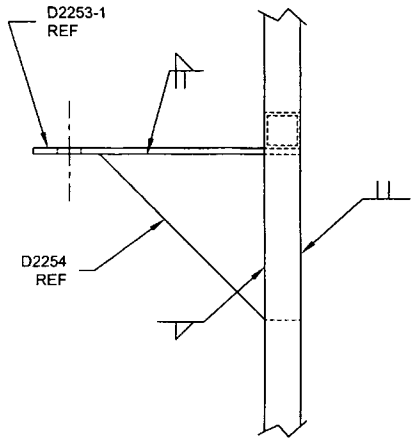

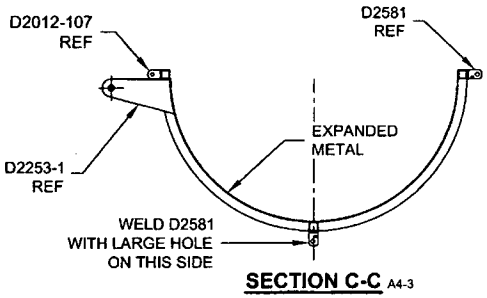

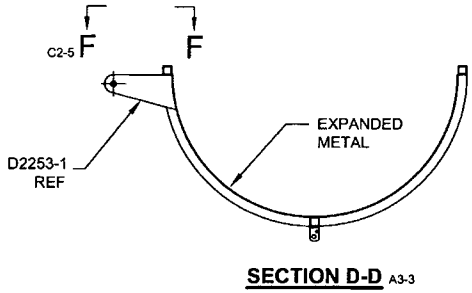

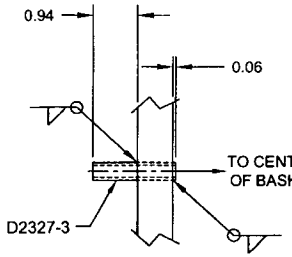

DETAIL G
SPACER INSTALLATION C6-2 C5-3 C6-5
SCALE 4X

RELEASED 2010-11-25

DESIGN	JB	**DART AEROSPACE LTD** HAWKESBURY, ONTARIO, CANADA	
DRAWN			
CHECKED		DRAWING NO.	REV. H
MFG. APPR.		D2330	SHEET 5 OF 6
APPROVED		TITLE	SCALE
DE APPR.		BASKET ASSEMBLY (206B)	NTS
DATE	10.09.28	COPYRIGHT © 1994 BY DART AEROSPACE LTD THIS DOCUMENT IS PRIVATE AND CONFIDENTIAL AND IS SUPPLIED ON THE EXPRESS CONDITION THAT IT IS NOT TO BE USED FOR ANY PURPOSE OR COPIED OR COMMUNICATED TO ANY OTHER PERSON WITHOUT WRITTEN PERMISSION FROM DART AEROSPACE LTD	

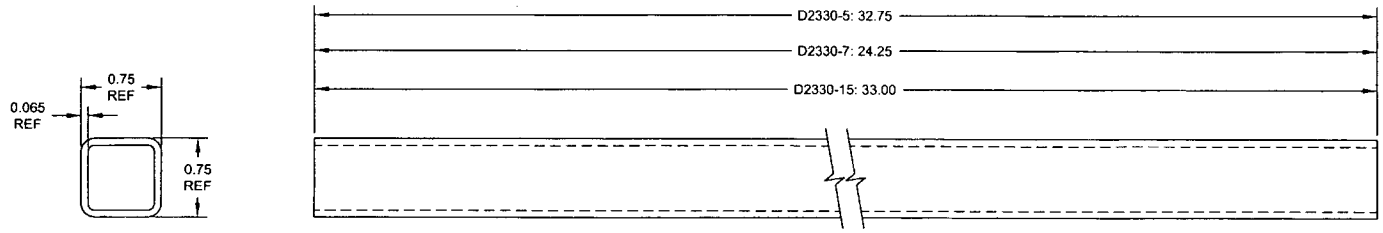

D2330-5 FRAME

D2330-7 FRAME

D2330-15 FRAME

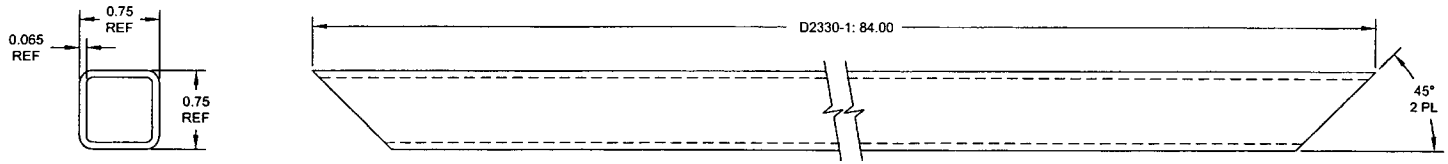

D2330-1 FRAME

70834

RELEASED
2010 -11- 25

NOTES:
1) FRAME MATERIAL: SEE SHEET 1
2) FINISH: NONE
3) TOLERANCES: PER DART QSI 018 UNLESS OTHERWISE NOTED
4) UNITS: INCHES UNLESS OTHERWISE NOTED
5) BREAK SHARP EDGES: 0.005 TO 0.010 MAX
6) IDENTIFICATION: N/A
7) WEIGHT: N/A

DESIGN	JB	**DART AEROSPACE LTD** HAWKESBURY, ONTARIO, CANADA
DRAWN		
CHECKED		DRAWING NO. REV. H
MFG. APPR.		D2330 SHEET 6 OF 6
APPROVED		TITLE SCALE
DE APPR.		BASKET ASSEMBLY (206B) NTS
DATE	10.09.28	